WAGNER

Studio Series

TECHNICAL SPECIFICATIONS

Dimensions: 52 a 54 cm seat centres
47 cm depth
90 cm height

Backrest: Manufactured over a MDF board, bowed in roof tile-shaped, on which an open cell polyurethane foam block _ upholstered by means of a fabric cover_ is fixed. All this structure is protected by a wood covering and a perimeter frame in beech compressed wood.
Foam density, 40 Kg/m^3

Seat: Manufactured over a MDF board, bowed in roof tile-shaped, on which an open cell polyurethane foam block _upholstered by means of a fabric cover_ is fixed. All this structure is protected by a wood covering and a perimeter frame in beech compressed wood.
The seat pan folds by means of an automatic noiseless maintenance-free double spring.
Foam density, 40 Kg/m^3

Side Panel: Wood fibres board, finish in beech. Steel central leg. Concelaed floor fixation system.

Armrest: Straight-shaped varnished solid wood.

Volume: 0.140 m^3 / unit

Weight: 17.00 Kg not assembled

Euro Seating reserves the right to modify the dimensions and characteristics without prior notice. All dimensions and specifications are given for information purposes only.

Polígono El Ram nº 11 26280 Ezcaray (La Rioja) Spain Tel:+34 941 427 450 www.euroseating.com euroseating@euroseating.com

WAGNER

Studio Series

EURO SEATING International Group
No limits to inspiration.

DRAWING

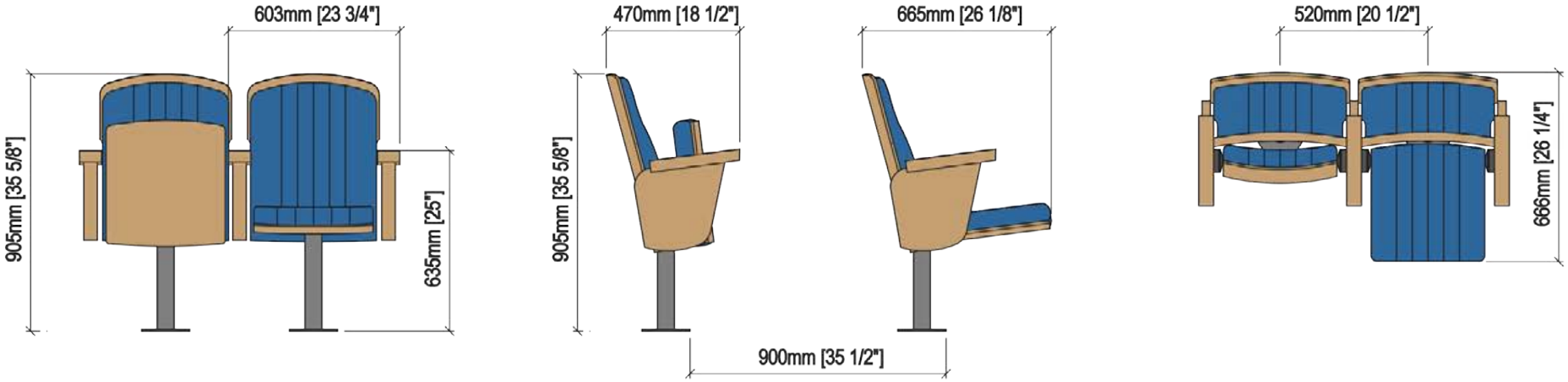

OPTIONS

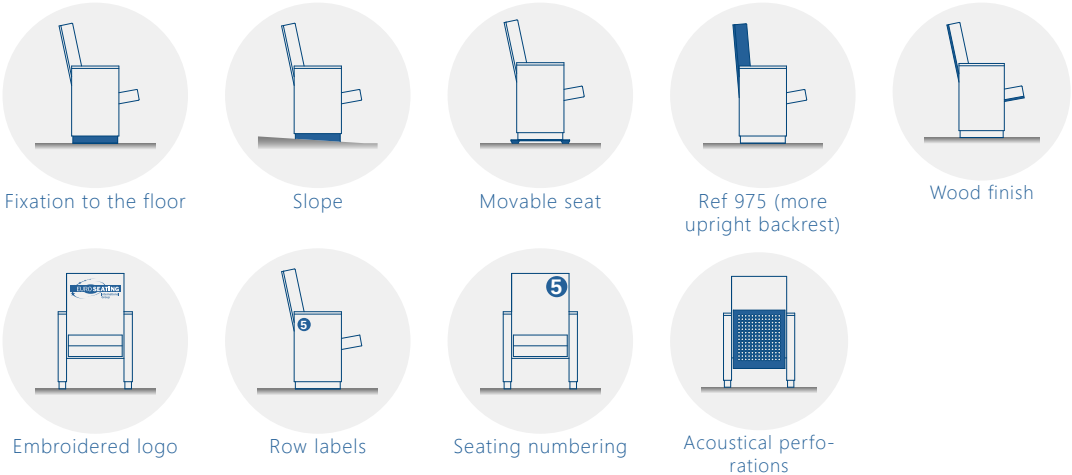

CERTIFICATES

	Fabric	Fire Barrier	Foam	Seat
BS 5852:2006	●			
BS-EN 1021-1:2006	●			
CAL TB 117-2013, SECTION 1	●			
UNE 23.727-90 1R (M1)	●	●		
UNE-EN 1021-1:2006 / UNE-EN 1021-2:2006	●	●	●	●
BS 5852:1979 Parte 1		●		
Coeficiente de absorción acústica				●

AIDIMA INSTITUTO TECNOLÓGICO MUEBLE, MADERA, EMBALAJE Y AFINES · ffmo · FIRA · ISO 9001 BUREAU VERITAS Certification · ISO 14001 BUREAU VERITAS Certification · AENOR Ecodiseño UNE-EN ISO 14006

Euro Seating reserves the right to modify the dimensions and characteristics without prior notice. All dimensions and specifications are given for information purposes only.

Polígono El Ram nº 11 26280 Ezcaray (La Rioja) Spain Tel:+34 941 427 450 www.euroseating.com euroseating@euroseating.com

WAGNER

EURO SEATING International Group
No limits to inspiration.

Universidad de Santander. Cantabria. SPAIN

Auditorio Joaquín Rodrigo. Las Rozas De Madrid. SPAIN

Copernicus Science Centre. Warsaw. POLAND

EURO SEATING AROUND THE WORLD

Polígono El Ram nº 11 26280 Ezcaray (La Rioja) Spain Tel:+34 941 427 450 www.euroseating.com euroseating@euroseating.com